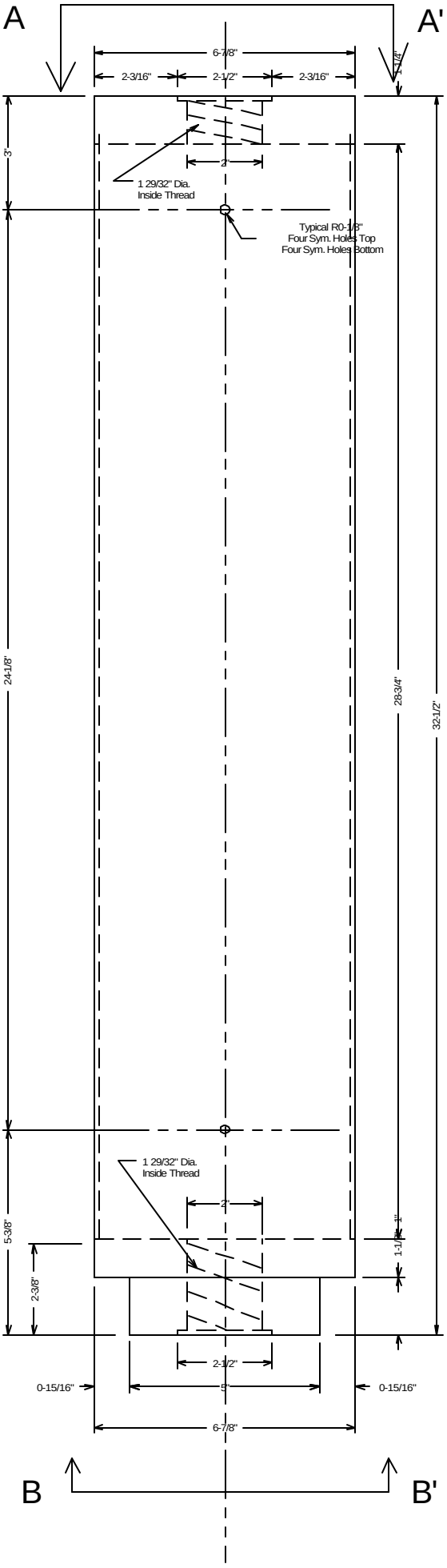

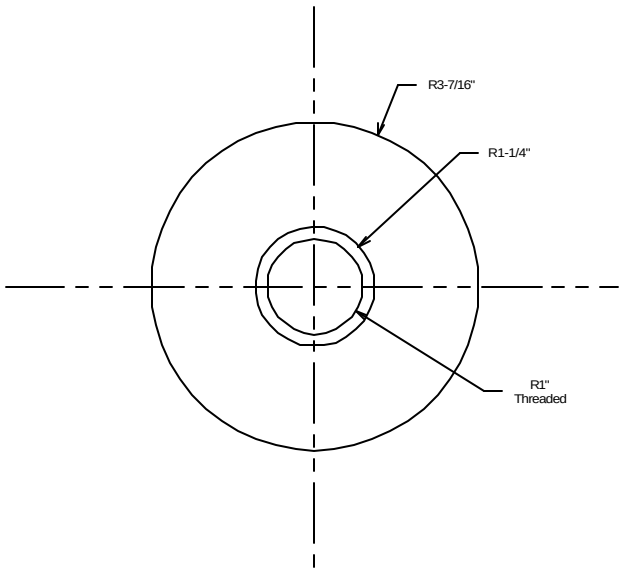

View A-A'

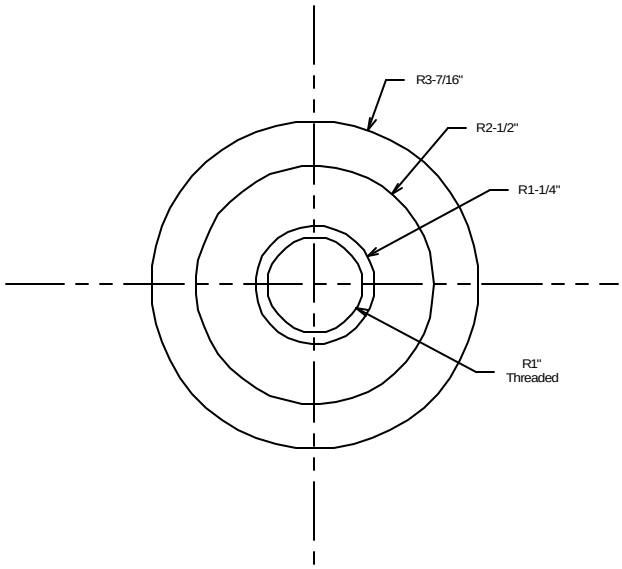

View B-B'

Inner Electrode to Blumlein
Drawn by: MARK WALKER Date: 7/23/01
Part#: R7B
Part Name: INNER ELECTRODE
Quanty: 1
Part Description: Screws into
water switch # R8
Material: ALUMINUM
Revised by: Robert A. Schill, Jr. Date: 8/16/01
Checked by: Walker Fitzgerald Date: 8/17/01